REV NO	REVISION NOTE	DATE	SIGNATURE	CHECKED

ITEM	STOCK CODE	QTY	DESCRIPTION
1	#2625	1	BS-420A BASE KIT
2	#1508	4	BS-KMP
3	#1511	1	BS-VDM-01
4	#3080	1	BS-2.5DCA (SUPPLIED WITH #1511)
5	#3075	1	BS-2.5XB (SUPPLIED WITH #1511)
6	#1273	1	BS-22HC (NOT SHOWN)
7	#2623	1	BS-10XA
8	#3073	1	BS-10CBZ (SUPPLIED WITH #2623)

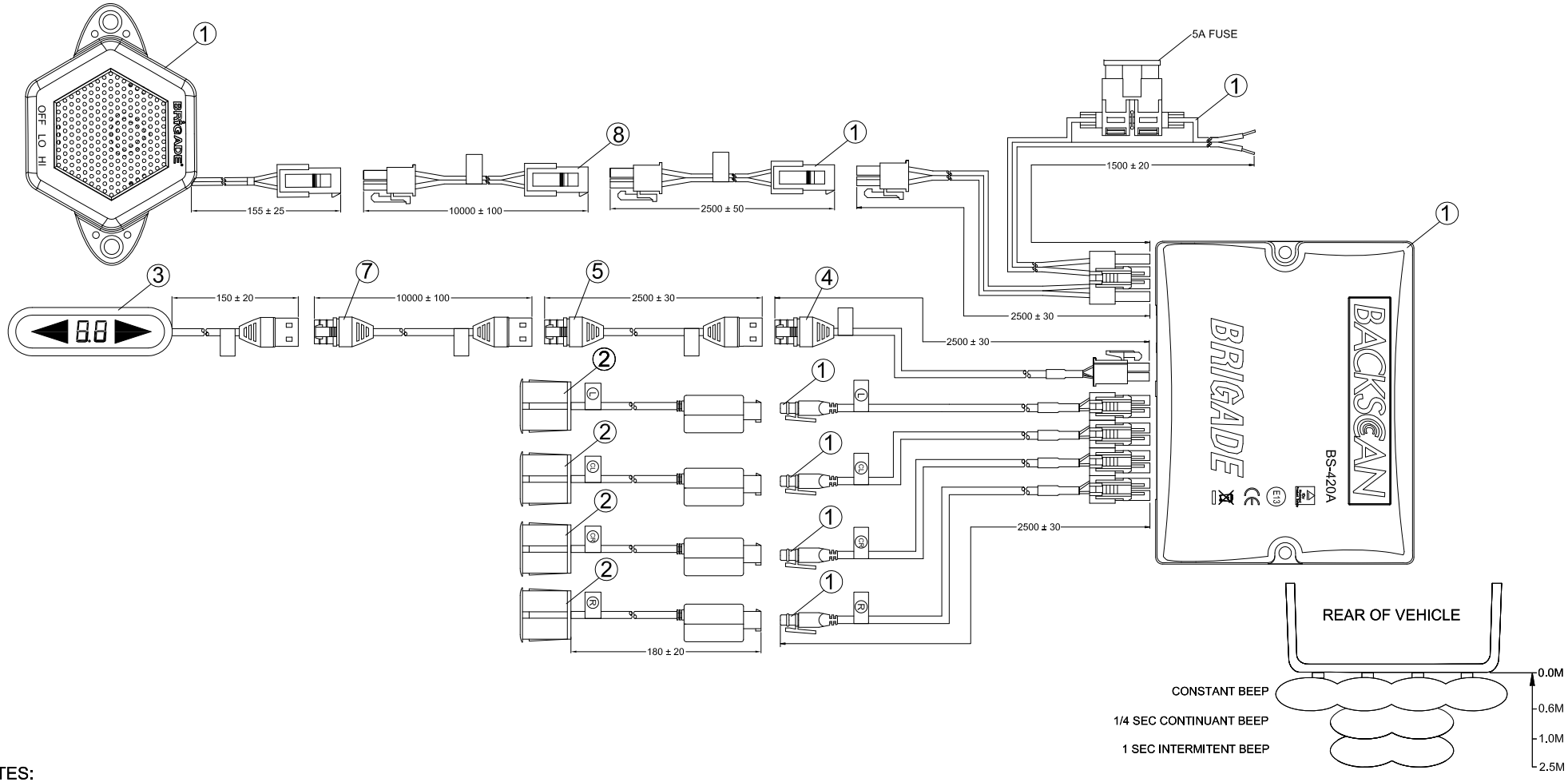

NOTES:
DIMENSIONS IN MM.
REFER TO COMPONENT DRAWINGS FOR COMPONENT DETAIL.
REFER TO PRODUCT SPEC FOR PRODUCT SPECIFICATIONS.

ITEMREF	QUANTITY	TITLE/NAME, DESIGNATION, MATERIAL, DIMENTION ETC		ARTICLE NO./REFERENCE	
DESIGNED BY M.BUTLER	CHECKED BY D.KERAI	APPROVED_BY_DATE S.MATTHEWS	FILE NAME	DATE 20/08/09	SCALE N/A
BRIGADE ELECTRONICS PLC		BS-420A_KMP_(#1205)			
		BE-000868-00-09		EDITION 0	SHEET 1/1

PROPRIETARY NOTICE
THIS DESIGN AND TECHNICAL INFORMATION APPEARING ON THIS DRAWING IS THE PROPERTY OF BRIGADE ELECTRONICS PLC, AND IS DISCLOSED IN CONFIDENCE. IT IS NOT TO BE COPIED, REPRODUCED, REVEALED TO OR APPROPIATE BY OTHERS, EITHER IN WHOLE OR IN PART WITHOUT THE EXPRESS WRITTEN CONSENT OF BRIGADE ELECTRONICS PLC.